Model		LGH-100RVX-E							
Electrical power supply		220-240V/50Hz, 220V/60Hz							
Ventilation mode		Heat recovery mode				Bypass mode			
Fan speed		SP4	SP3	SP2	SP1	SP4	SP3	SP2	SP1
Running current (A)		2.50	1.20	0.50	0.17	2.50	1.20	0.51	0.19
Input power (W)		420	200	75	21	420	200	75	23
Air volume	(m³/h)	1000	750	500	250	1000	750	500	250
	(L/s)	278	208	139	69	278	208	139	69
External static pressure (Pa)		170	96	43	11	170	96	43	11
Temperature exchange efficiency (%)		80.0	83.0	86.5	89.5	–	–	–	–
Enthalpy exchange efficiency (%)	Heating	72.5	74.0	78.0	87.0	–	–	–	–
	Cooling	71.0	73.0	77.0	85.5	–	–	–	–
Noise (dB) (Measured at 1.5m under the center of unit in an anechoeic chamber)		37.0	31.0	23.0	18.0	38.0	32.0	24.0	18.0
Weight (kg)		54							

*The Air outlets noise (45 angle,1.5meters in front of the unit) is about 21dB greater than the indicated value.(at Fan speed 4)
*The running current, the input power, the efficiency and the noise are based on the rating air volume, and 230V/50Hz.
*For the specification at the other frequency contact your dealer.
*Use this unit between static pressure 60Pa and 240Pa at Fan speed4. Otherwise the motor protection may work and reduce its output or the noise level might be larger.

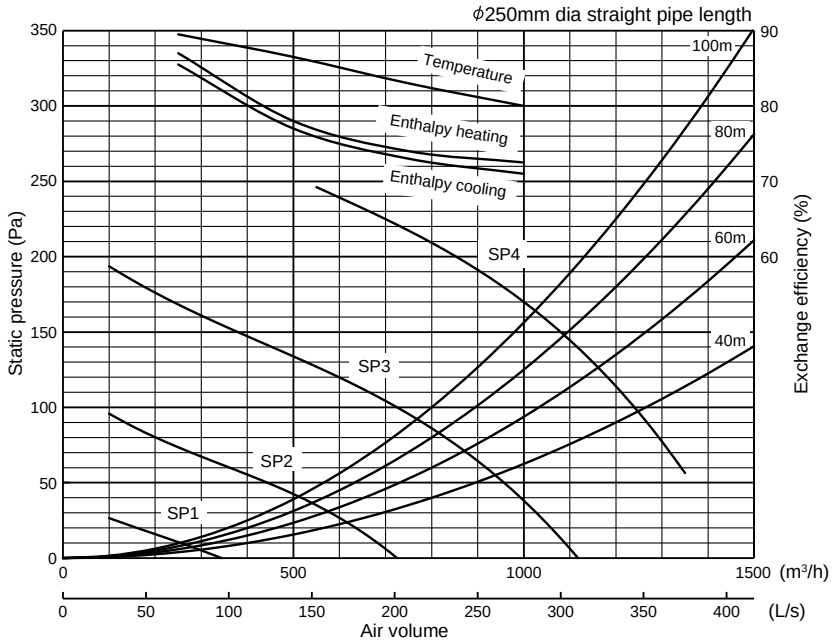

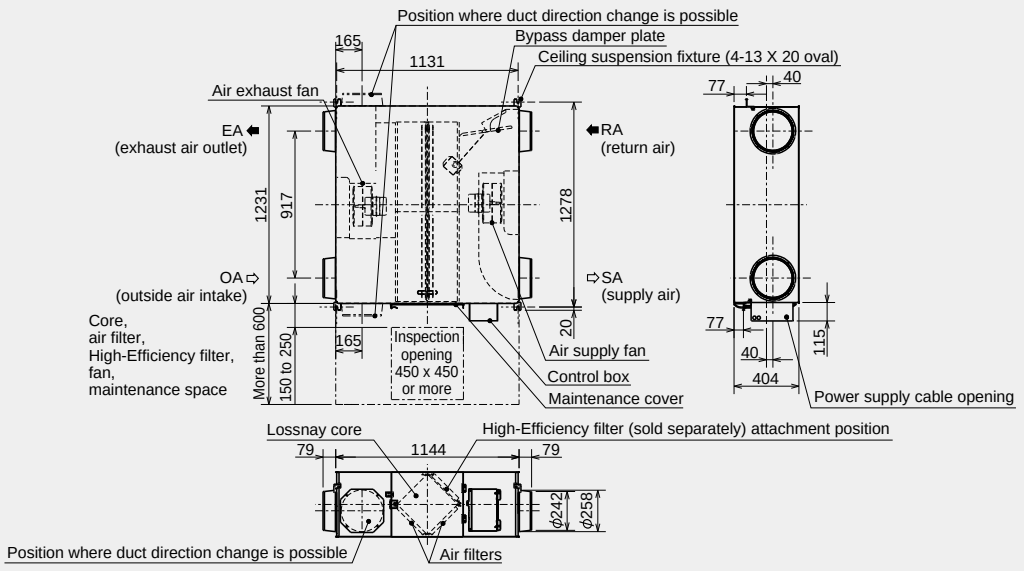

Unit: mm